TE Solution

Total Engineering Solution

in Wind Engineering and Vibration Control

COMPARISON BETWEEN TMD & AMD

OCTOBER.2018

What is Vibration Control?

The Role of Vibration Control Device

▶ What is Vibration Control Device?

→ A mechanical device usually installed on the top floor of the building to reduce the wind induced vibration to improve the habitability for the occupants living inside

▶ How?

→ Additional moving mass is installed in the building which absorbs and dissipates the kinetic energy of the building caused by strong gust of wind to reduce the building's acceleration and hence horizontal displacement of the building.

By installing vibration controlled device such as Tuned Mass Damper, one can increase the structural damping of the building without any structural changes, which is essential in controlling wind vibration.

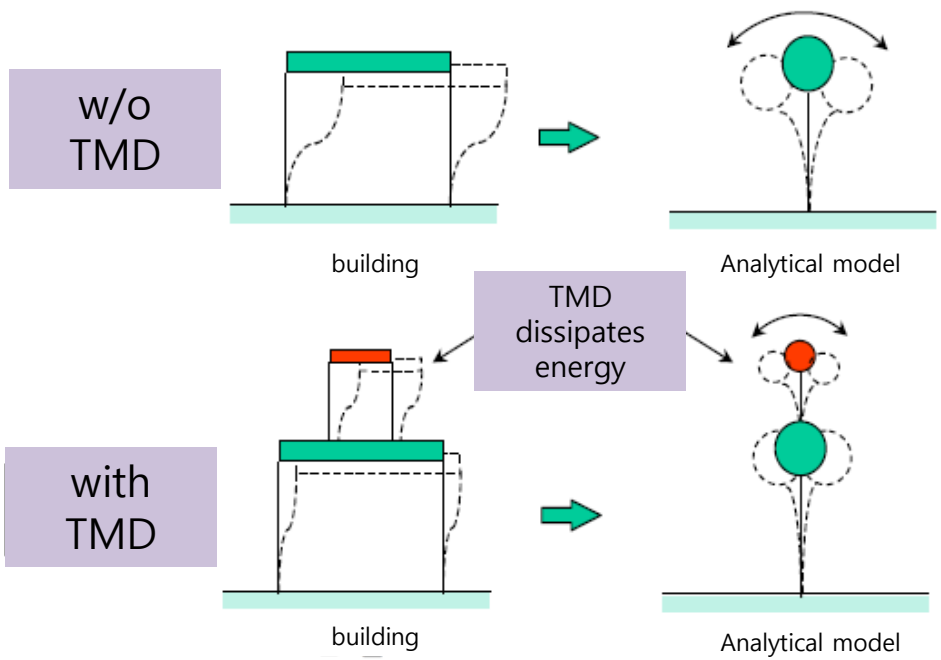

When is Vibration Control Device needed?

▶ To Secure Serviceability against Wind Vibration

→ With ths installation of vibration control device such as TMD, the building's peak acceleration against wind is predicted to meet the serviceability criteria set by international organizations such as AIJ 2004, ISO6897 & ISO10137 and provide a comfortable living environment for the inhabitants especially occupying the higher floors.

International Organization for Standardization

Guidelines for Serviceability Acceleration on Buildings

▶ Advantages of Vibration Control Device

→ By measuring the dynamic characteristics of the structure and installing vibration control device alone, wind vibration can be controlled(with increased structural damping) without changing the structural shape of the building or adding extra mass on the structure which can be expensive.

▶ How to control Wind Vibration

Structural Engineering Method (change in design - increase stiffness or mass) **vs.** *External Method (install TMD)*

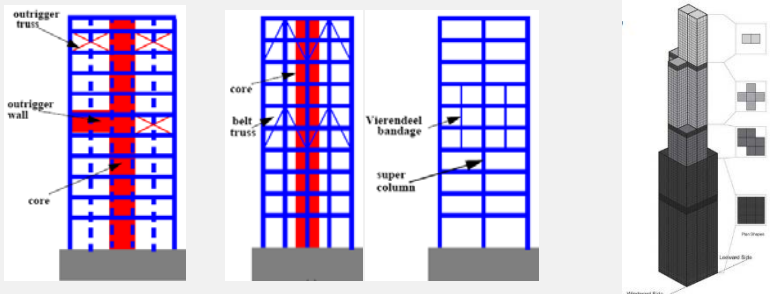

Increasing Stiffness

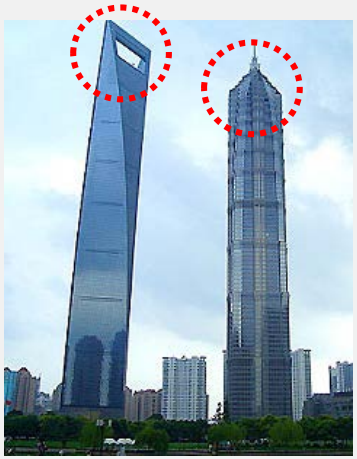

Aerodynamic Modification

vs.

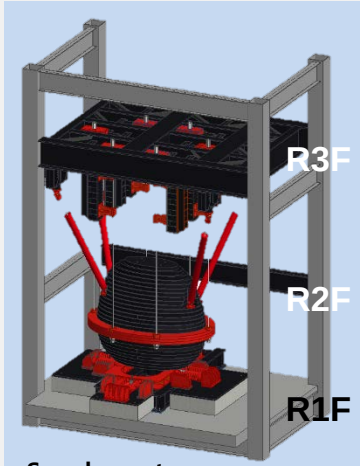

Supplementary Damping System

Why is Vibration Control Device needed?

▶ Meeting the Serviceability Criteria

Office Buildings vs. *Residential Buildings*

→ According to ISO10137:2007 serviceability criteria, the residential building requirements are significantly more stringent than the office buildings

▶ To Secure Pleasant Working Environment

→ In case of Air Traffic Control Tower at the Airport where the workers occupy the structure 24/7/365, wind vibration can negatively affect their work performance which can cause various safety issues

▶ Preemptive Measure to Control Occupant Complaints

→ The issues with serviceability such as occupant comfort are more likely to surface in the first few years following the initial occupation.

→ The floor where the wind vibration is most strongly felt by the occupants happens to be the top floor of the building where the real estate value is the highest(in case of a residential building, the penthouse is usually located on the top floor).

<Air Traffic Control Towers are occupied by the workers 24/7/365, but the shape of the structure makes in very prone to wind induced vibration>

<Usually the floor with the most wind vibration happens to be the top floor. Imagine yourself in the penthouse of a high rise luxury building on windy day>

Types of Vibration Control Devices

Tuned Mass Damper – The Principle

https://www.youtube.com/watch?v=lhNjfNUOUo8

Sliding type TMD

Sliding type TMD has the moving mass sit on the linear motion railing system. More complex in design, but more compact than PTMD.

https://www.youtube.com/watch?v=GzMuF-LMGaM

Pendulum type TMD

Pendulum type TMD has the moving mass hung on pendulum arms. It is the mechanically simplest solution.

https://www.youtube.com/watch?v=JaIdGw2lQ7g

TLCD (Tuned Liquid Column Damper)

Tuned Liquid Column Damper uses liquid as a moving mass to counter act against building motion. Requires bigger volume due to water's lower density.

https://www.youtube.com/watch?v=hzThcJtC9Ws

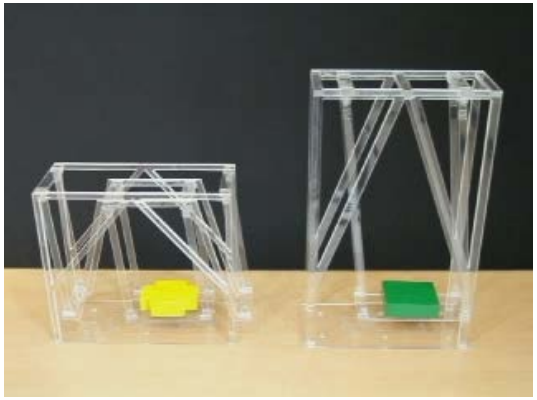

Double Pendulum TMD

Double Pendulum TMD introduces folding mechanism and the middle frame in order to incorporate longer pendulum arms while requiring less vertical space.

Tuned Mass Damper – by Types

Linear Bearing Type TMD

Pros

- ▶ Requires less vertical space than pendulum TMD.
- ▶ Requires less maintenance than AMD.
- ▶ Cost efficient solution

Cons

- ▶ Sensitive to friction especially when frequency is low(longer natural period) and hence limited displacement.
- ▶ More difficult to design if the size becomes too big.
- ▶ More expensive than Pendulum TMD

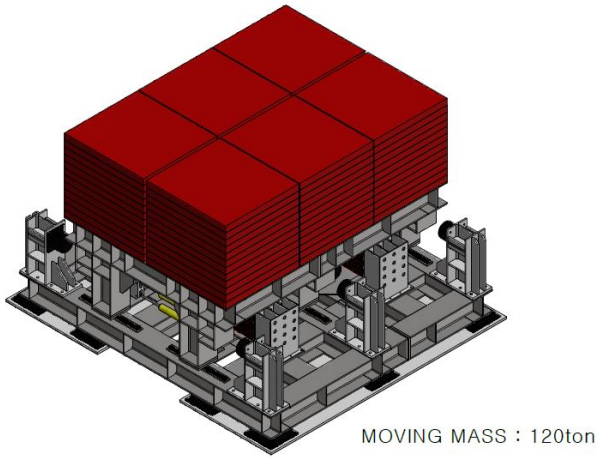

Linear Bearing Type Bi-directional TMD

Pendulum Type TMD

Pros

- ▶ Can accommodate larger displacement as it requires less horizontal space.
- ▶ No need to worry about friction coefficient.

Cons

- ▶ Requires more vertical space.(pendulum arm length is proportionally increased in relation to the natural period of the mode to be controlled)
- ▶ Difficult to tune if the frequency difference between the y and x axis is too big for bi-directional design

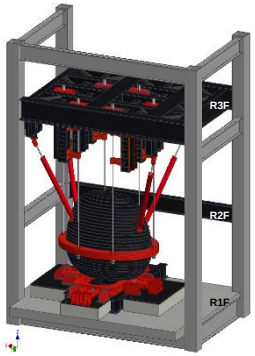

Single Pendulum

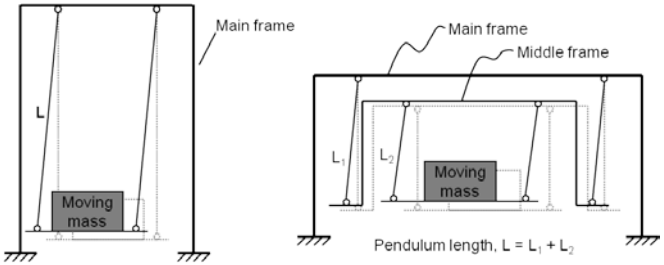

Double Pendulum TMD was introduced to minimize the vertical installation space that has been the weakness

VS

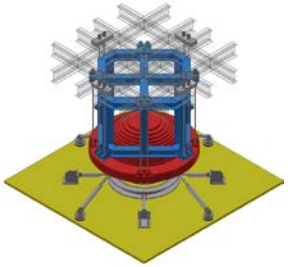

Double Pendulum

Active Mass Damper

Pros

- ▶ Higher control performance than TMD
- ▶ Requires much smaller mass as it is motor driven.
- ▶ Hence, provides more space efficient solution.
- ▶ Can control multiple modes with a single unit
- ▶ Much wider tuning range.

Cons

- ▶ More frequent maintenance required due to existence of servo motor.
- ▶ Expensive due to more complex mechanism.
- ▶ Requires external power source and operating temp below 40℃.

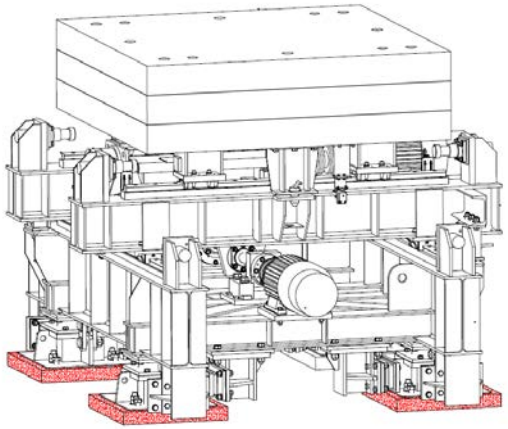

Bi-directional AMD

Miniature AMD Model to demo its control performance

https://www.youtube.com/watch?v=Q3ro0jmYj64

Active Mass Damper – by Types

Ball Screw Servo Motor Type AMD

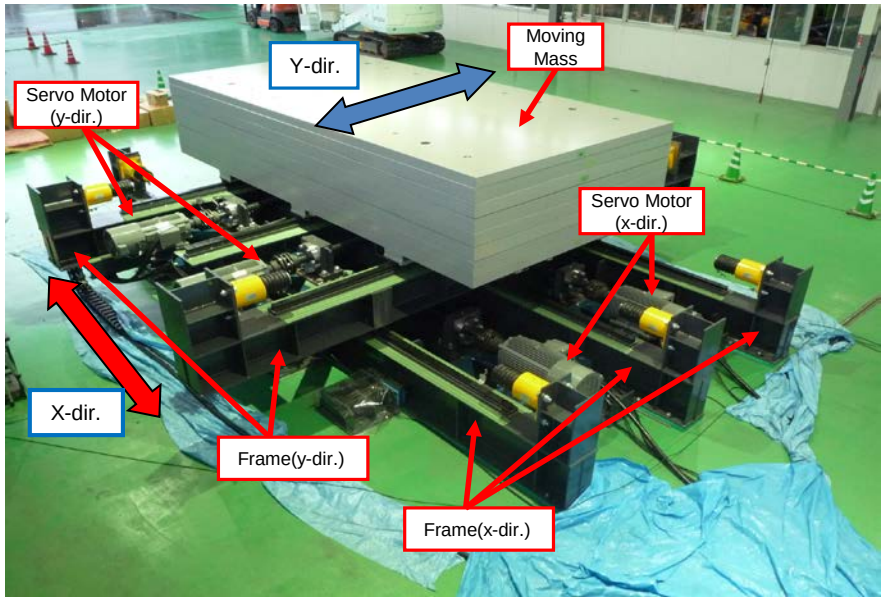

AMD with conventional servo motors installed to drive the moving mass unit.
The moving mass is connected to the ball screw where it moves back and forth.
The displacement is limited to about 1.5m

Linear Motor Type AMD

AMD with linear motor installed on the railing.
More compact system that requires less space.
It can accommodate much bigger displacement.
It makes almost no mechanical noise during operation.

Principle of Active type Mass Dampers

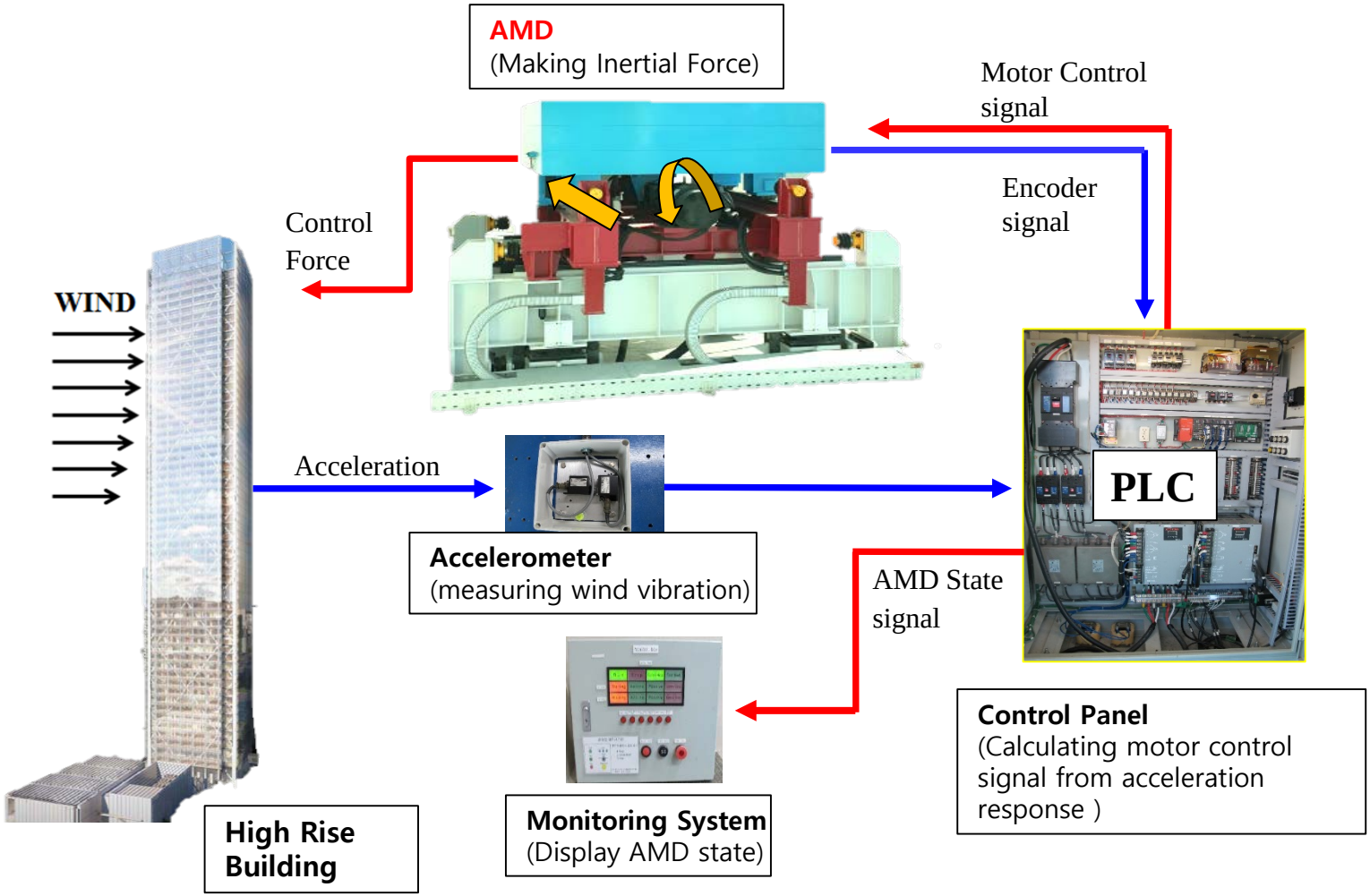

AMD Overview(Demo at TES test tower)

https://www.youtube.com/watch?v=8R71hjm6kQ4

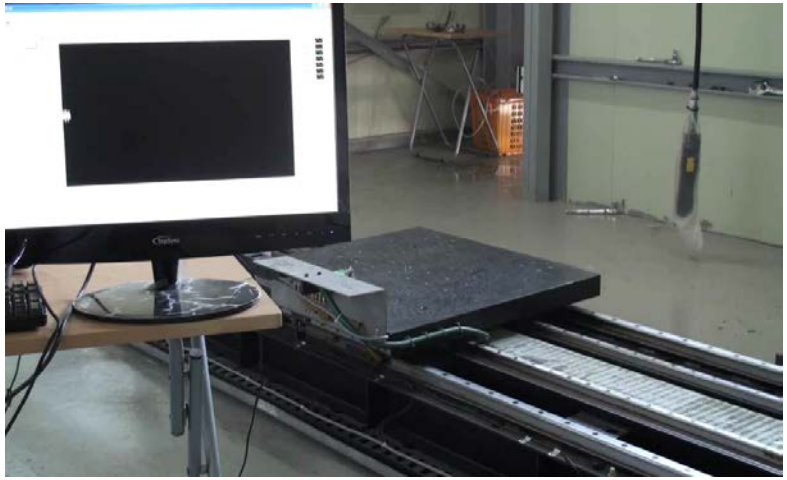

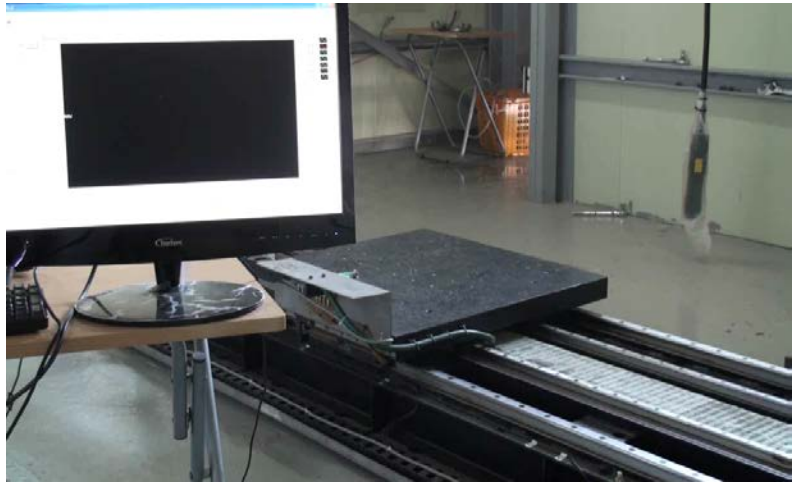

<Excitation ->Free Vibration >

< Excitation ->AMD control >

AMD is installed Inside the TESolution Test Tower.

The footages on the left is when the structure is excited and let it free vibrate.

The footage on the right is when the structure is excited and AMD is activated to immediately control the vibration it has detected.

The Difference between TMD & AMD

▶ The key difference between TMD and AMD is the existence of the motor or not

Tuned Mass Damper

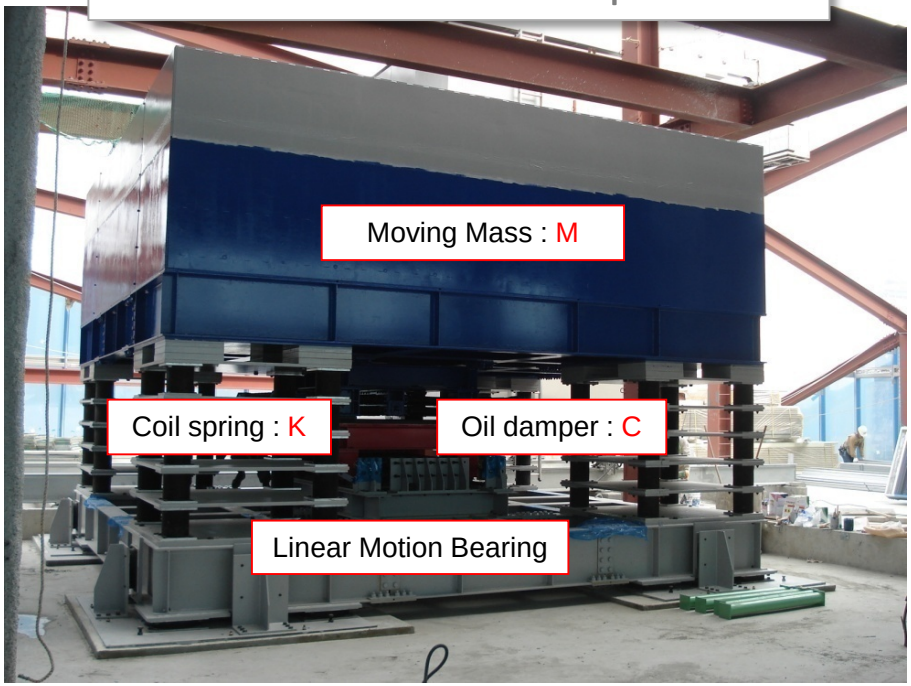

POSCO E&C Head Office TMD(2011)

Active Mass Damper

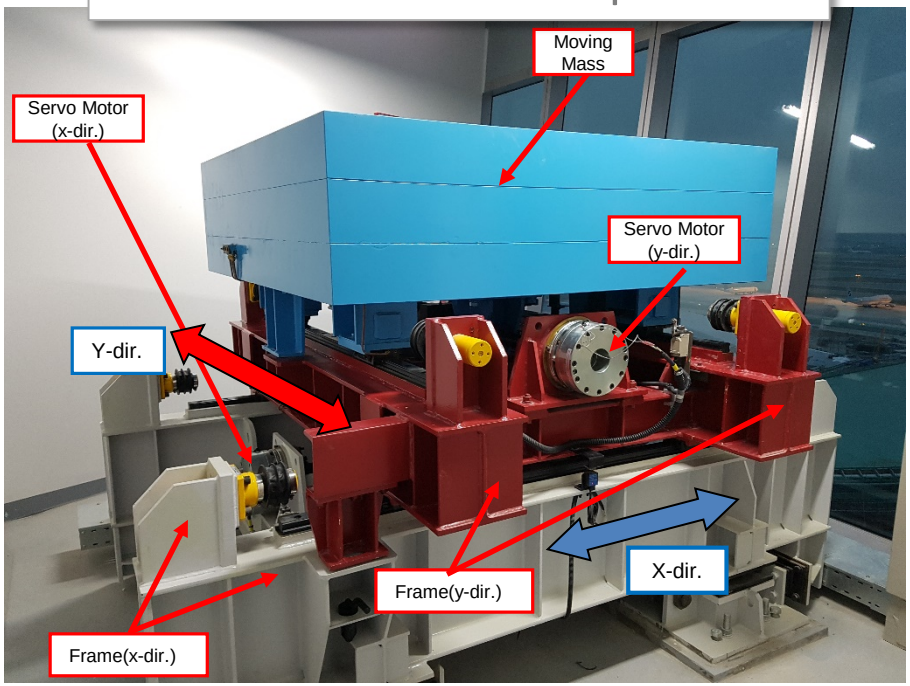

Incheon International Airport the 2nd ATC Tower AMD(2016)

Types of Vibration Control Devices

Passive Type	Active Type – *requires external power source*
▶ *Low Control Performance*	▶ *High Control Performance*
▶ *Maintenance Free-relatively simple*	▶ *Regular Maintenance Required – more complex system*
▶ *More Economical*	▶ *More Expensive*
▶ *More Installation Space*	▶ *Less Installation Space – Compact System for tighter installation space*

Tuned Mass Damper

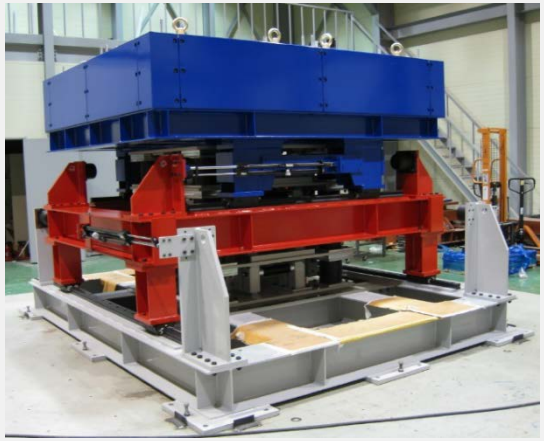

▶ Bi-dir. TMD for Ski-jump tower

Active Mass Damper

▶ Bi-directional AMD for ATC tower

Hybrid Mass Damper

▶ Bi-directional HMD for ATC tower

Vibration Control Devices - Summary

	Type of Vibration Control Devices		
	TMD(Tuned Mass Damper)	AMD(Active Mass Damper)	HMD(Hybrid Mass Damper)
Characteristics	◈ **Passive Type** - TMD is tuned to the structure's natural frequency without any help from external power source and uses the inertial force of the moving mass only to control wind vibration.	◈ **Motor Driven** - Unlike TMD, AMD has driving units(servo motor, control panel) and due to this, the design & the production cost goes up ◈ **Control Algorithm** - Sensor(accelerometer) receives the signal from the structure and sends it to the PLC. PLC then, sends the signal to AMD and the motor driven moving mass changes its position to ideal location to maximize the control performance	◈ **Hybrid between TMD and AMD** - It is a hybrid between TMD and AMD, so for the normal displacement of wind vibration to be controlled, AMD portion is utilized whereas for greater displacement which exceeds the operational range of AMD, TMD portion kicks in to control wind vibration.
Pros	◈ **Mechanical Simplicity** - Generally, TMD is simpler in its design compared to active type vibration control devices and hence cost less to produce. It is also relatively maintenance free through out its lifetime.	◈ **Compact Size & Less installation Space** - AMD, due to its high control performance, has much smaller moving mass and requires relatively small installation space and smaller damper room. Also doesn't require as much structural reinforcement as bigger TMD. ◈ **High Control Performance (Higher damping)** The control performance of vibration control device can be defined as "moving mass x displacement(movement range) of moving mass". Since motor driven, AMD virtually has no limitation in displacement. By doubling or tripling of the displacement of the AMD compared to that of TMD, it can also increase the control performance by 2x or 3x.	◈ **High Control Performance** - With the advantage of both TMD and AMD, its control performance is relatively high.
Vs.			
Cons	◈ **Requires more Installation Space** - If the goal control performance is high, structural reinforcement is required for the TMD's self-load and bigger damper room is required as the TMD requires bigger moving mass than AMD and this can also result in increase in production cost	◈ **Requires Periodic Maintenance** - Due to more complex system with the driving units, regular maintenance is required.	◈ **Ball Screw can hinder the TMD performance** - If HMD is the combination of "LM Guide+Ball Screw+Servo Motor", not much of control performance can be expected from TMD portion due to high friction coefficient from the ball screw ◈ **Complex System** - Requires additional components from AMD(coil springs and oil dampers) and results in bigger size(hence bigger damper room) and increased production cost ◈ **Requires Periodic Maintenance** - Due to more complex system with the driving units and the components of conventional TMD as well, not only is regular maintenance is required, but also more complex than AMD.

TMD Application

▶ TMD Application by type

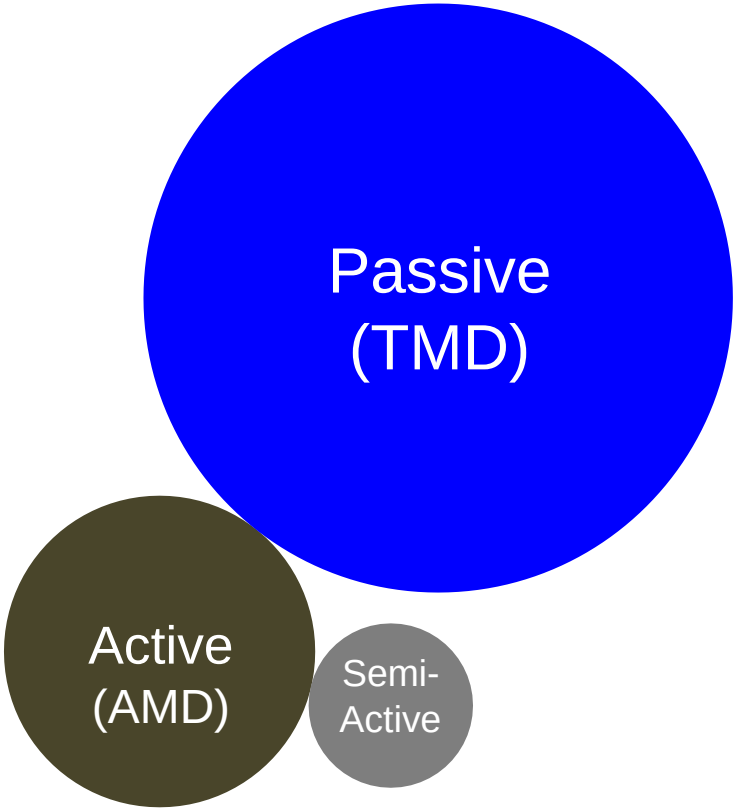

▶ Reason for TMD Application

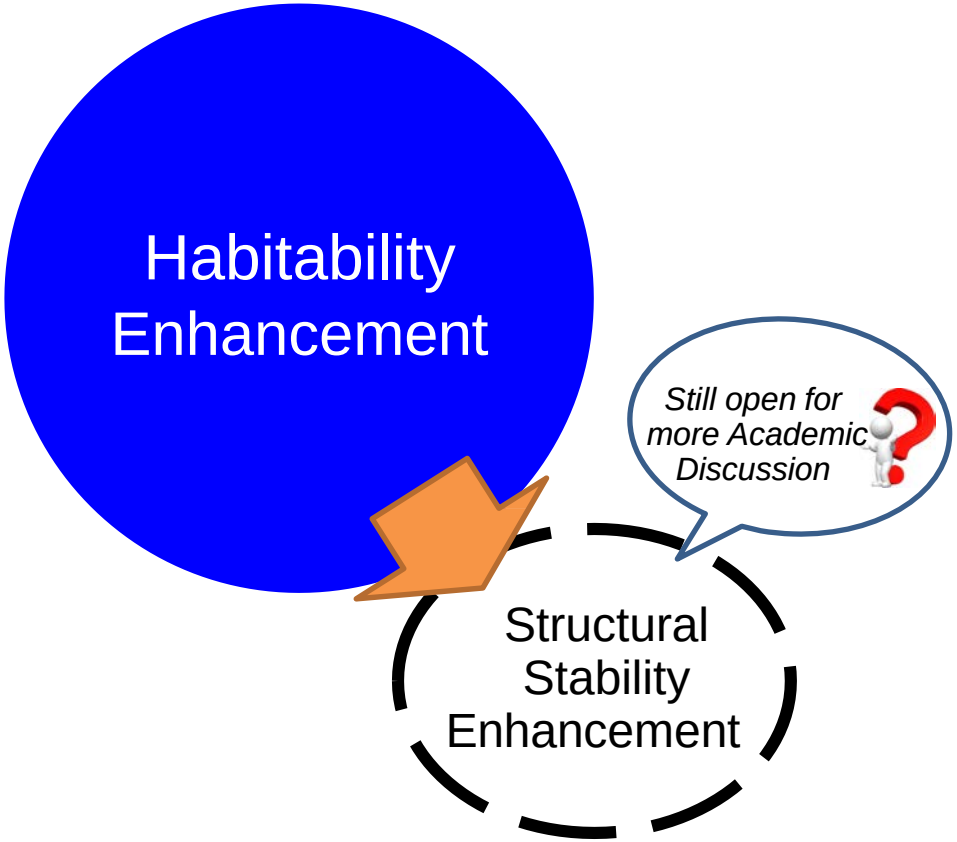

Contact Us

TE Solution
www.tesolution.com

Total Engineering Solution in Wind Engineering & Vibration Control

+82-31-658-2906 mwshin@tesoltuion.com

+82-10-9479-1895 www.tesolution.com

+82-31-658-2908 /windandvibration

142 Seungjin-gil Gongdo-eup, Anseong-si,
Gyeonggi-do, S. Korea
PO#: 17563

TESolution refers to Total Engineering Solution, specializing in Wind Engineering & Vibration Control.

Copyright ©2015 by TESolution Co. Ltd. All rights reserved.